ROSS DRESS FOR LESS STANDARD TEMPERATURE SENSOR REQUIREMENTS
ELECTRICAL CONTRACTOR MUST LOCATE TEMPERATURE SENSORS PER THE EMS DRAWINGS.

Zone Location	Mounting Surface Type				Mounting Height			Vertical Mounted Device			Wire Type	Notes:
	Steel	Sheet-rock Dry-wall	Concrete Filled	Concrete	+42"	+93"	+95"	4" Square shallow box with single gang flat ring vertical	"Wiremold" single gang white shallow box vertical	Single gang plaster ring vertical		
Sales Floor - Column	X					X			X		2 x # 18Ga. TSP	Do not locate within 10' of supply diffusers except on opposite side of column.
		X				X				X	2 x # 18Ga. TSP	
			X			X			X		2 x # 18Ga. TSP	
Processing Room - Wall		X					X			X	2 x # 18Ga. TSP	Mount next to interior door
				X			X	X			2 x # 18Ga. TSP	Mount next to interior door
Women's Fitting Room - Wall		X				X				X	2 x # 18Ga. TSP	Mount at the end of hallway on wall not visible from foyer
Manager's Office - Wall		X			X					X	2 x # 18Ga. TSP	Mount next to interior door
Override Panel Touchscreen		X			X						2 x # 18Ga. TSP & CAT5	Next to interior door (ORP touchscreen mounting & cut out by CCBAC)
Cash Office		X			X					X	2 x # 18Ga. TSP	Mount next to interior door

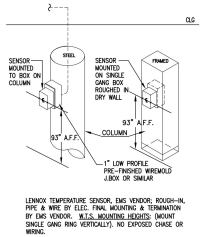

LENNOX TEMPERATURE SENSOR, EMS VENDOR; ROUGH-IN, PRV & WIRE BY ELEC. FINAL MOUNTING & TERMINATION BY EMS VENDOR. W.T.S. MOUNTING HEIGHTS (MOUNT SINGLE GANG RING VERTICALLY). NO EXPOSED CHASE OR WIRING.

1 TEMPERATURE SENSOR ROUGH-IN INSTRUCTIONS — N.T.S.

2 NOT USED

3 NOT USED

4 NOT USED

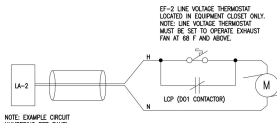

5 EF-2 EXHAUST FAN — N.T.S.

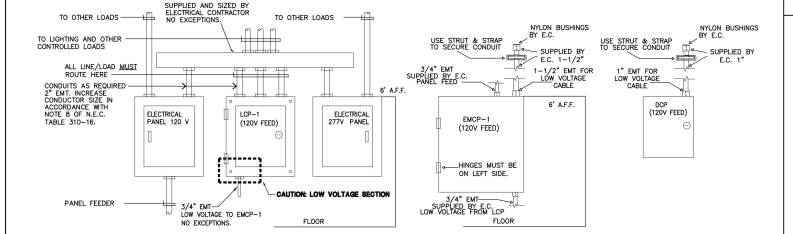

6 TYPICAL PANEL MOUNTING — N.T.S.

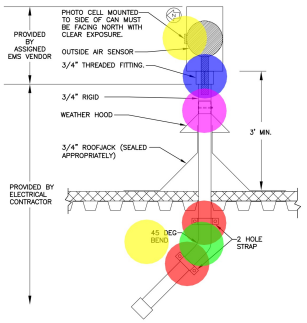

7 SENSOR ROOF CAN — N.T.S.

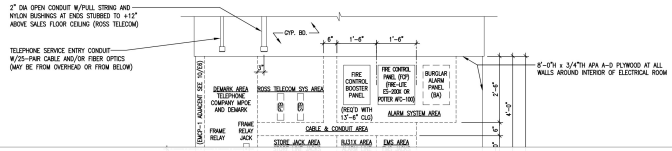

8 ORP MOUNTING — N.T.S.

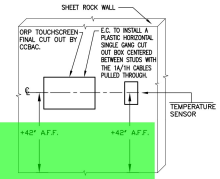

9 ORP MOUNTING — N.T.S.

- P: Sensor Roof Can: 2- Hole Strap — 2.0 EA
- P: Sensor Roof Can: 45 Degree Elbow Bend — 1.0 EA
- P: Sensor Roof Can: PhotoCell — 1.0 EA
- P: Sensor Roof Can: 3/4" Threaded Fitting — 1.0 EA
- P: Sensor Roof Can: 3/4" RGS Conduit = 10 FT — 1.0 EA
- P: Sensor Roof Can: Sensor Roof Can — 1.0 EA

ROSS DRESS FOR LESS STANDARD LIGHTING/WALL SWITCH AND EMS CONTROL REQUIREMENTS

ELECTRICAL CONTRACTOR MUST VERIFY IN FIELD CORRECT CIRCUITS ARE SWITCHED AS SHOWN AND INITIAL THE COLUMN

"OS SW" – OCC

ALL SWITCHES

ONE SWITCH IS

NOT REQ'D =

TYP. V														
277	PROCESSI													
277	RESTROO													
277	MANAGER													
277	LOCKER R													
277	CASH OFF													
277	FITTING R													
277	SALES DE													
277	SALES VE													
277	SALES													
120	SALES DE													
120	SALES DE													
120	MALL ENT													
277	RESTROO													
277	OFFICE H													
120	EXTERIOR													
277	EXTERIOR													
277	EXTERIOR ABOVE DOOR LTG.					X			NOT REQ'D		2			
277	DAY LIGHTING (IF REQUIRED)							X	NOT REQ'D		8			
208	HOT WATER HEATER					X			NOT REQ'D					
120	RE-CIRCULATING PUMP FOR HOT WATER HEATER					X			NOT REQ'D					
120	EXHAUST FANS (EXCEPT ELECTRICAL ROOM)	X							--		4			
277	JANITOR'S CLOSET	–	–	–	–	–	–	–	OS SW	CONNECT TO EMERGENCY HOT LEG		----------		
277	EQUIPMENT CLOSET	–	–	–	–	–	–	–	OS SW	CONNECT TO EMERGENCY HOT LEG				
120	CANOPY UTILITY SERVICE LIGHT	–	–	–	–	–	–	–	OS SW	CONNECT TO RECEPTACLE CIRCUIT	1	----------		
277	PROCESSING ROOM/STOCKROOM DOCK LIGHTING					X			NOT REQ'D	CONNECT TO DESIGNATED EXTERIOR DOOR LIGHTING CIRCUIT	2			
277	ELECTRICAL ROOM	–	–	–	–	–	–	–	S1	CONNECT TO EMERGENCY HOT LEG		----------		
120	FITTING/RESTROOM/JANITOR'S CLOSET AND LOCKER ROOM/EQUIPMENT CLOSET EXHAUST FANS	X							NOT REQ'D		4,6,7	----------		
120	VENDING MACHINES	X							NOT REQ'D		4			
120	ELECTRICAL ROOM EXHAUST FAN	–	–	–	–	–	–	–	--	DV 16 THERMOSTAT		----------		

1 – WALL MOUNTED OCCUPANCY SENSOR SWITCH (IF STORE HAS A SIGN WORK CAVITY)
2 – ADDITIONAL EXTERIOR LIGHTS AGREED UPON BY ROSS ONLY; NOT CODE REQUIRED WALKWAY LIGHTING PROVIDED BY LANDLORD.
3 – TYPICALLY 2 CIRCUITS REQUIRED – VERIFY WITH SIGN CONSULTANT.
4 – TYPICALLY THIS LOAD WILL BE TURNED ON WHEN STORE IS OPENED BY EMPLOYEES.
5 – TYPICALLY THIS LOAD WILL BE TURNED ON WHEN STORE IS OPENED TO PUBLIC.
6 – THERMOSTAT IN EQUIPMENT CLOSET WILL CONTROL EXHAUST FAN AFTER OCCUPIED HOURS FOR LOCAL COOLING OF EQUIPMENT CLOSET (ALL HOURS).
7 – EXHAUST FAN SERVING LOCKER ROOM/EQUIPMENT CLOSET CONTROLLED VIA LCP D01 AND THERMOSTAT IN EQUIPMENT CLOSET.
8 – 1 PHOTOCELL WILL CONTROL 1 LEVEL OF CONTINUOUS DIMMING FOR DAY LIGHT HARVESTING.

10 EMS CONTROL REQUIREMENTS — N.T.S.

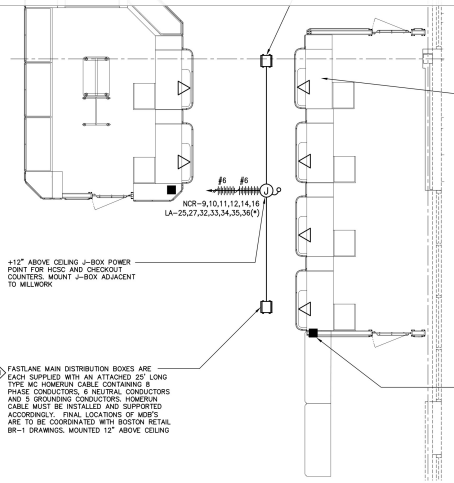

ALL POWER RECEPTACLES ARE PRE-INSTALLED BY CASEWORK MFG'R BELOW EACH REGISTER LOCATION (9 TYPICAL) AND INTERCONNECTED VIA FASTLANE MODULAR WIRING SYSTEM. FINAL CONNECTION TO BOSTON RETAIL MAIN DISTRIBUTION BOXES BY OTHERS.

NOTES:

1. THE GENERAL CONTRACTOR AND THE GENERAL'S ELECTRICAL SUBCONTRACTOR ARE RESPONSIBLE FOR THE FOLLOWING:
   1.1. ELECTRICAL CIRCUITS SHOWN ABOVE FROM THE RESPECTIVE ELECTRICAL PANELS TO A J-BOX LOCATED AT THE STORE-FRONT AREA.
   1.2. PURCHASE AND INSTALLATION OF THE BOSTON RETAIL FASTLANE MAIN DISTRIBUTION BOXES.
   1.3. ELECTRICAL CONNECTION OF THE BOSTON RETAIL FASTLANE MAIN DISTRIBUTION BOXES, INCLUDING VERIFYING POWER TO THE RESPECTIVE PORTS AND PINS ON THE BOSTON RETAIL FASTLANE MAIN DISTRIBUTION BOXES.
   1.4. ALL WORK IS TO BE DONE IN ACCORDANCE WITH BEST PRACTICE AND LOCAL ELECTRICAL CODES.
2. THE CHECKOUT AND CUSTOMER SERVICE/JEWELRY ISLAND WILL ARRIVE WITH ALL BOXES/OUTLETS PRE-INSTALLED. INSTALLATION OF POWER POLES AND FASTLANE MODULAR WIRING SYSTEM BY OTHERS.
3. (*) JEWELRY CASE LIGHTING CIRCUIT LA-36 MUST BE ROUTED THRU EMS DIGITAL OUTPUT #2 FOR CONTROL BY LIGHTING CONTACTOR.

#6 MINIMUM WIRE FOR ALL HOME RUNS

NOTE: ADDITIONAL CIRCUITS PROVIDED TO BOSTON RETAIL MDB 1 FOR FUTURE CASH REGISTER POSITIONS.

11 CHECK-OUT AREA PLAN — 1/4"=1'-0"

CONTRACTOR MUST VERIFY ALL CLEARANCES AND DIMENSIONS IN FIELD

DESIGNED BY:	DRAWN BY:	CHECKED BY:
DB	DB	CAT
APPROVED BY: CAT		REVISIONS

NO.	DATE

CHRISTIAN A. TODD
NO. 24GE05385800

N.J. CERTIFICATE OF AUTHORIZ. NO. 24GA27944500

WATCHUNG SQUARE MALL
1515 US ROUTE 22
WATCHUNG, NEW JERSEY 07069
SOMERSET COUNTY NEW JERSEY

McHENRY & ASSOCIATES
25001 EMERY ROAD, SUITE #200
WARRENSVILLE HEIGHTS OHIO 44128

SCALE: DATE: 05-02-2024

mcgarchitecture.com

ROSS DRESS FOR LESS

STORE # 2662
" 2662 - WATCHUNG, NEW JERSEY "
Watchung Square Mall - 1515 US Route 22
Watchung, New Jersey 07069

REVISIONS
BID/PERMIT 05-03-2024

SCALE AS NOTED

PROJECT NO. 23.291.10

SHEET NUMBER
E6

MCG ARCHITECTS 2023 ALL RIGHTS RESERVED

May 02, 2024 - 04:45:54 Drng Name: C:\Users\dbordwell\OneDrive - McHenry & Associates\Desktop\Con Jobs 2023\23.291.10 Ross - Watchung NJ\23.291.10_Ross - Watchung NJ.dwg Updated By: dbordwell

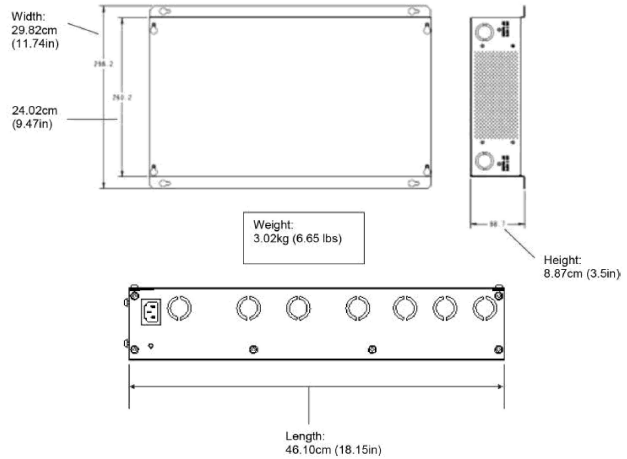

1 9060 CONTROLLER DETAIL N.T.S.

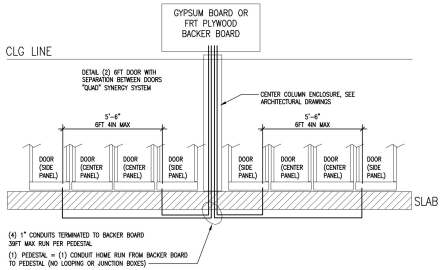

2 TYPICAL CONDUIT LAYOUT N.T.S.

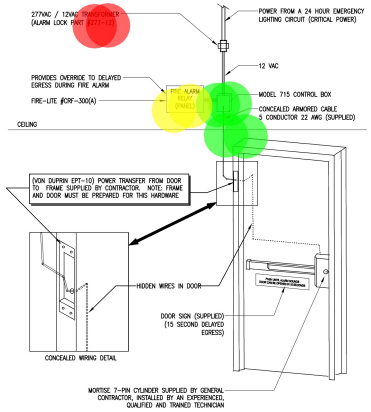

5.1 E8 TYPICAL DEVICE INSTALLATION ISOMETRIC
SCALE: 1 1/2" 1'-0"

INSTALLATION OF UNDER SLAB ELECTRONIC SURVEILLANCE CONDUITS IS BY GENERAL CONTRACTOR COMPLETE AT TURN-OVER.
INSTALLATION OF PEDESTALS AND LOW VOLTAGE WIRING IS BY TENANT'S LOSS PREVENTION VENDOR AFTER TURN-OVER.

3 SYNERGY EAS PEDESTAL CONDUIT DETAIL N.T.S.

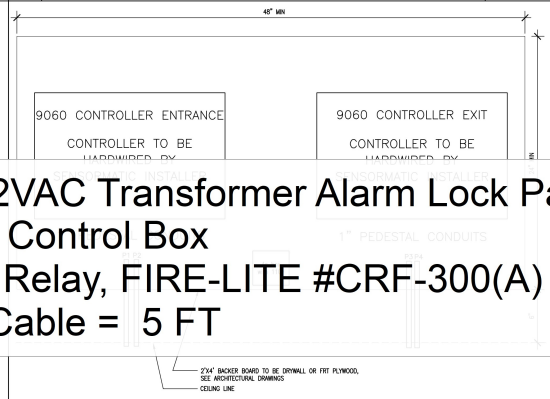

4 EAS BACKER BOARD LAYOUT N.T.S.

- Door Details: 277VAC/12VAC Transformer Alarm Lock Part #277-12 — 2.0 EA
- Door Details: Model 715 Control Box — 2.0 EA
- Door Details: Fire Alarm Relay, FIRE-LITE #CRF-300(A) — 2.0 EA
- Door Details: 5#22, AC Cable = 5 FT — 2.0 EA

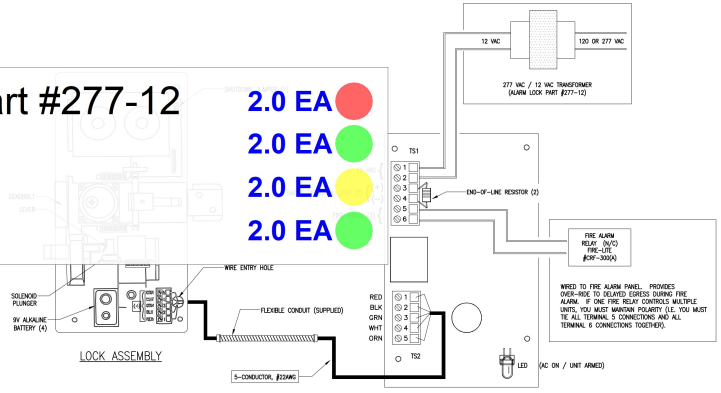

KEY NOTES:
(1) REMOVE JUMPER FOR TWO-MINUTE ALARM SHUTDOWN
(2) IF SMOKE DETECTOR IS USED, REMOVE END-OF-LINE RESISTOR AND INSTALL AC ROSS SMOKE-DETECTOR TERMINALS
(3) REMOVE JUMPER IF CONNECTING TO FIRE PANEL OR REMOTE NORMALLY-CLOSED KEYSWITCH.
(4) BATTERY MUST BE INSTALLED, HOWEVER DO NOT CONNECT BATTERY UNTIL AC POWER IS APPLIED.

5.2 E8 TYPICAL DEVICE WIRING DIAGRAM
SCALE: N.T.S.

ELECTRONIC ARTICLE SURVEILLANCE (EAS) INSTALLATION GUIDELINES

1) THE OPERATIONAL EFFECTIVENESS OF THE EAS SYSTEM DEPENDS ON CORRECT PLACEMENT OF THE CONDUITS AND PEDESTALS. MAX DISTANCE BETWEEN STUB-UP AT THE PEDESTALS IS 6FT 4INCHES. MAX LENGTH OF CONDUIT FROM PEDESTAL TO BACKER BOARD LOCATION IS 39FT. ALL NEW STORE INSTALLATIONS MUST BE REVIEWED AND APPROVED BY TENANT'S LOSS PREVENTION VENDOR. SEE CONTACT INFORMATION BELOW. VERIFY EXACT LOCATION OF PEDESTALS WITH ROSS STORES CONSTRUCTION MANAGER.
2) MAXIMUM PEDESTAL CONDUIT LENGTH 39FT FROM PEDESTAL STUB-UP TO BACKER BOARD.
3) CONDUIT STUB-UP DISTANCE FROM DOOR THRESHOLD 36 INCHES.
4) THE SENSITIVITY OF THE SYSTEM REQUIRES THAT ONLY PHASE MATCHED POWER BE USED IF THE SYSTEM IS TO FUNCTION PROPERLY. DO NOT PERMIT ANY DEVICES EXCEPT THE EAS PEDESTAL SYSTEM TO BE CONNECTED TO THAT CIRCUIT.
5) AC POWER IS 3-WIRE, 120VAC DEDICATED LP PHASED WATCHED POWER WITH ISOLATED GROUND (ND TAP-OFFS OR SHARING)

CONTACT INFORMATION

MICHAEL UPTON (714) 267-1885 (MICHAEL.UPTON@JCI.COM) HAS BEEN DESIGNATED AS TENANT'S FIRST POINT OF CONTACT FOR THE INSTALLATION ELECTRONIC ARTICLE SURVEILLANCE (EAS) SYSTEM. IN THE EVENT HE IS NOT REACHABLE ESCALATE TO JIMMY KHANGURA (925) 468-1053 JIMMY.KHANGURA@ROS.COM

6 EAS INSTALLATION GUIDELINES N.T.S.

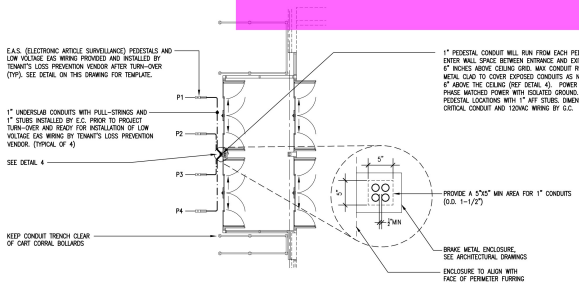

7 SENSORMATIC ENTRY CONFIGURATION N.T.S.

5 DELAYED EGRESS DEVICE AS NOTED

CONTRACTOR MUST VERIFY ALL CLEARANCES AND DIMENSIONS IN FIELD

DESIGNED BY:	DRAWN BY:	CHECKED BY:
DB	DB	CAT
APPROVED BY:		REVISIONS
CAT		NO. DATE

CHRISTIAN A. TODD
NO. 24GE05385800

N.J. CERTIFICATE OF AUTHORIZ. NO. 24GA27944500

WATCHUNG SQUARE MALL
1515 US ROUTE 22
WATCHUNG, NEW JERSEY 07069
SOMERSET COUNTY NEW JERSEY

McHENRY & ASSOCIATES
25001 EMERY ROAD, SUITE #200
WARRENSVILLE HEIGHTS OHIO 44128

SCALE: DATE: 05-02-2024

mcgarchitecture.com

ROSS DRESS FOR LESS

STORE # 2662
" 2662 - WATCHUNG, NEW JERSEY "
Watchung Square Mall - 1515 US Route 22
Watchung, New Jersey 07069

REVISIONS
BID/PERMIT 05-03-2024

SCALE
AS NOTED

PROJECT NO. 23.291.10

SHEET NUMBER
E8

MCG ARCHITECTS 2023
ALL RIGHTS RESERVED

Mar 02, 2024 - 09:40:54 DWG Name: C:\Users\dbordwell\OneDrive - McHenry & Associates\Desktop\Con Jobs 2023\23.0836_Ross - Watchung NJ\23836_E8.dwg Updated By: dbordwell

CODED NOTES:

1. +8" A.F.F. TAMPER PROOF, SAFETY GRAY DUPLEX COLUMN RECEPTACLE (MIDDELL RUSCORIRTING WITH GRAY COVER (TAYMAC #MX10505). VERIFY LOCATION WITH ROSS C.M.
2. THE ELECTRIC FEED FROM THE DETEX SYSTEM TO THE JUNCTION BOX IS TO BE CONCEALED.
3. PROVIDE POWER TO DELAYED EGRESS DETEX SYSTEM. REFER TO SHEET E8 FOR DETAILS OF POWER CONNECTION TO DETEX EQUIPMENT. MOUNT TRANSFORMER 12" ABOVE CEILING.
4. EXISTING ELECTRICAL SERVICE TO REMAIN, INCLUDING CT CABINET, METER, AND THE MAIN SWITCHBOARD (PANEL 'MDP', 'PP', 'HA', 'LA', AND 'LB'). SEE ONE-LINE DIAGRAM ON PLAN E5 FOR ADDITIONAL INFORMATION. FIELD VERIFY ALL REQUIREMENTS PRIOR TO BID.
5. E.C. SHALL EXTEND EXISTING 4" TELEPHONE CONDUIT TO NEW TELEPHONE BACKBOARD. CONFIRM THAT THERE IS 25 PAIR CABLE MINIMUM. OTHERWISE PROVIDE NEW FROM DEMARC. INCLUDE ALL MATERIAL & LABOR REQUIRED FOR A NEW COMPLETE, OPERATIONAL TELEPHONE SERVICE.
6. CONDUIT FROM CENTER OF EACH ENTRY/EXIT STOREFRONT DOOR FROM ABOVE CEILING ON SALES FLOOR.
7. PROVIDE POWER CONNECTIONS FOR HAND DRYERS WITH GFCI PROTECTION ON CIRCUIT. ROUTE WIRING OF HAND DRYER CIRCUIT THROUGH DISCONNECT IN ELECTRICAL ROOM. SEE ELECTRICAL PART PLAN ON DRAWING E4. SEE ARCHITECTURAL ELEVATION FOR MOUNTING HEIGHTS OF ALL DEVICES.
8. CONFIRM LOCATION OF KNOX BOX WITH LOCAL AHJ PRIOR TO ROUGH-IN.
9. EXISTING FIRE PROTECTION RISER. E.C. TO PROVIDE CONNECTION TO ALL FIRE RISER TAMPER AND FLOW SWITCHES DEDICATED TO ROSS FOR TIE TO FACP. VERIFY QUANTITY WITH F.P.C.
10. J-BOX FLUSH MOUNTED IN SOFFIT AT HEAD OF DOOR, ON LATCH SIDE, WITH 3/4" CONDUIT TO 14'-0" A.F.F., FOR LP SECURITY ALARM CONTACT (BY ROSS LP).
11. PROVIDE POWER TO BURGLAR ALARM SYSTEM. MOUNT TRANSFORMER 12" ABOVE CEILING. ROUTE INSHTCUED (NOT LESS) AROUND LCP.
12. FLUSH J-BOX AT +84" A.F.F. FOR EXTERIOR BRACKET MOUNTED LP-CAMERA WITH CONDUIT AND PULL WIRE STUBBED TO INTERIOR OF STORE IN PROCESSING ROOM. COORDINATE EXACT LOCATIONS WITH ROSS L.P. PRIOR TO ROUGH-IN.
13. PROVIDE WIRING TO TRANSFORMER FOR MAGNETIC DOOR LOCK AS INDICATED. LOCK SHALL BE INTERLOCKED WITH PUSHBUTTON #3. DOOR IS ALWAYS UNLOCKED IN PATH OF EGRESS.
14. SENSORMATIC PEDESTAL W/ CONCEALED IN SLAB CONDUITS AT EACH ENTRY DOOR OPENING - SEE SHEET E8 FOR DETAILS.
15. CONDUIT ABOVE CEILING TO 3" FROM STRIKE EDGE OF DOOR.
16. J-BOX FLUSH MOUNTED IN SOFFIT AT HEAD OF DOOR, ON LATCH SIDE, WITH 3/4" CONDUIT TO ABOVE CEILING, FOR LP SECURITY ALARM CONTACT (BY ROSS LP).
17. CHECK-OUT AND CUSTOMER SERVICE COUNTERS SUPPLIED & INSTALLED BY ROSS. ROSS TO MAKE FINAL CONNECTIONS TO BOSTON RETAIL, SEE M7E6 FOR POWER AT EACH REGISTER. TYP.
18. SURFACE MOUNTED DOME CAMERA, INSTALLED BY ROSS L.P. ROUGH-IN BY E.C. WITH CONDUIT AND PULLSTRING STUBBED TO ACCESSIBLE INTERIOR SPACE ABOVE CEILING. COORDINATE EXACT LOCATIONS WITH ROSS L.P. PRIOR TO ROUGH-IN.
19. +42" JUNCTION BOX FOR LP, KEYPAD. VERIFY EXACT LOCATION WITH ROSS L.P. PRIOR TO ROUGH-IN.
20. PROVIDE JUNCTION BOX 12" ABOVE DOOR FOR CONNECTION TO AUTOMATIC DOORS. CONFIRM EXACT LOCATION WITH ROSS C.M. PRIOR TO ROUGH-IN.
21. PROVIDE RECEPTACLES IN WALL CAVITY. LOCATE NEAR HATCH ENTRANCE.
22. SHOW WINDOW RECEPTACLE. MOUNT WITHIN 18" OF WINDOW.

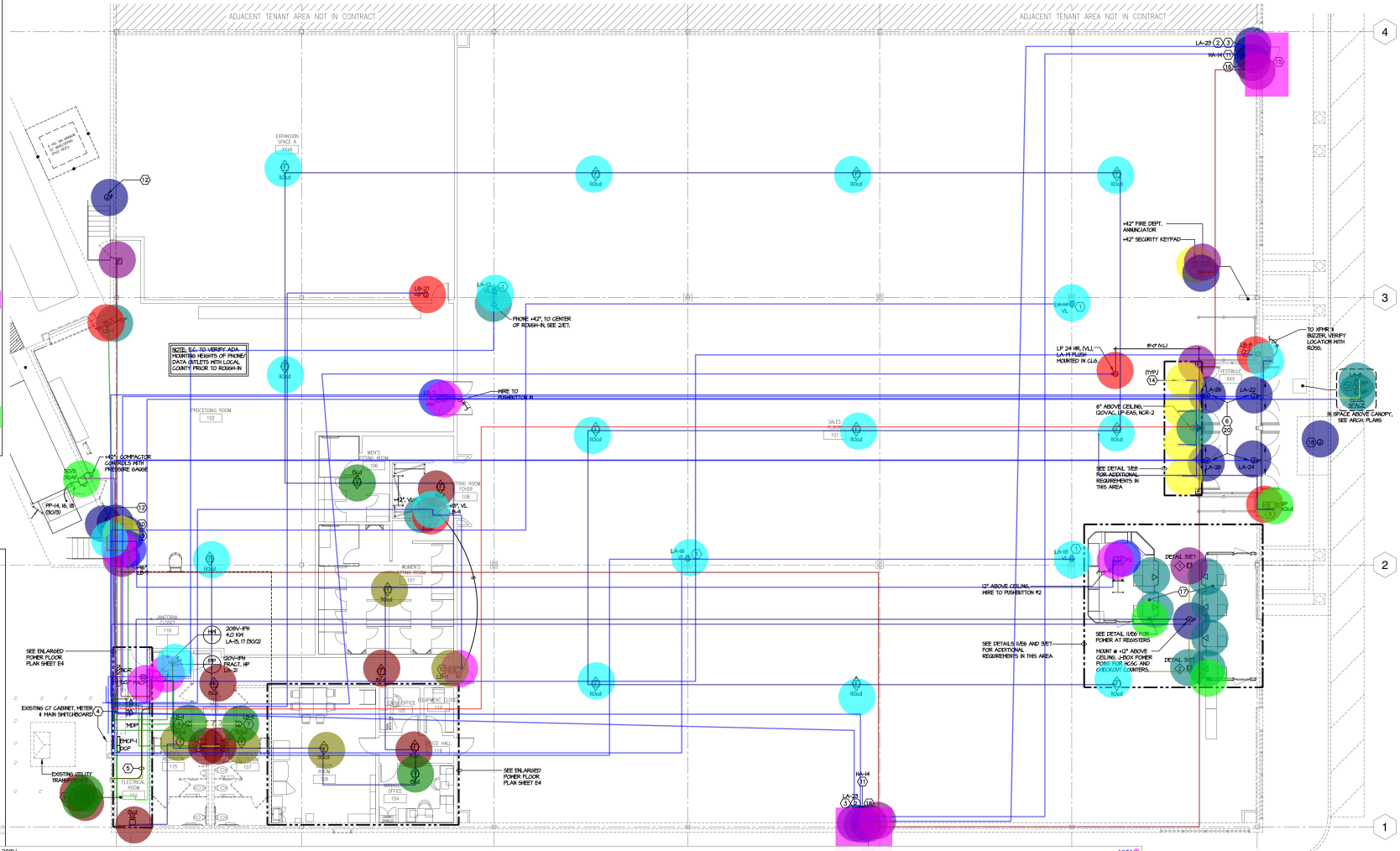

- Disc: 2P/30A Disconnect Switch, 208V
- Disc: 3P/30A/S/30AF Disconnect Switch
- FA: 15CD, Fire Alarm ADA Strobe Light Mounted In Ceiling
- FA: 15CD, Fire Alarm System Signal Horn
- FA: 15CD, Fire Alarm System Signal Horn With ADA Strobe, Flush Mounted In Ceiling
- FA: 30CD, Fire Alarm ADA Strobe Light Mounted In Ceiling
- FA: 110 CD, Fire Alarm System Signal Horn With ADA Strobe, Flush Mounted, Weather Proof
- FA: 110CD, Fire Alarm System Signal Horn With ADA Strobe, Flush Mounted In Ceiling
- FA: Fire Alarm Control Panel, FIRE-LITE ES-200X
- FA: Fire Alarm Smoke Detector
- FA: Fire Alarm System Knox Box
- FA: Fire Alarm System Manual Pull Station
- FA: Fire Alarm System Remote Annunciator Panel
- FA: Flow Switch
- FA: Tamper Switch
- FW: 2#14, 3/4" EMT Conduit
- FW: 2#16, 3/4" EMT Conduit
- FW: 4#18, 3/4" EMT Conduit
- Misc: 5"x5" 45 Junction Box With 110 Volts
- Misc: Junction Box
- Misc:Junction Box
- P: 20A-125V Duplex Receptacle, Weather Proof, HUBBELL GFR5362SG & RW57500
- P: 20A-300V Manual Staring Switch With Thermal Overload Relay, Square D Class 2520 (Or Approved)
- P: 20-125V Duplex Receptacle, HUBBELL, Type #CR20GRYTR With Gray Cover(TAYMAC #MX10505)
- P: 20-125V Duplex Receptacle, HUBBELL, Type CR5362(Gray)
- P: Boston Retail Main Distributuion Box #1 (BY GC), Isolated Ground/General Purpose
- P: Boston Retail Main Distributuion Box #2 (BY GC), Isolated Ground/General Purpose
- P: Door Bell Transformer
- P: Door Bell, 24V, EDWARDS #340 SERIES Adaptable
- P: GFCI Duplex Receptacle, HUBBELL TYPE GFR5362SG
- P: Push Button, CARLON #DHI201
- P: Sensormatic Pedestal
- P: Tele-Power Pole Provided By ROSS OPS And Installed By MillWork Vendor
- P: VON DUPRIN - MODEL 6211 Electric Strike And Locknetis (By SCHLAGE) 70IRD Momentary Wall Switch
- PWB: 3#12, MC Cable
- PWH: 1" PVC SCH 40 Conduit With Pull String
- PWH: 2#6, 1#10, 1" EMT Conduit
- PWH: 3#10, 3/4" EMT Conduit
- PWH: 3#12, 3/4" EMT Conduit
- PWH: 4#10, 3/4" EMT Conduit
- PWH: 19#10, 3/4" EMT Conduit
- PWH: 19#10 MC Cable
- Sec: Security Keypad
- Tele: 4" EMT Conduit With Pull String
- Tele: Telephone Outlet
- PWH: 5#10, 3/4" EMT Conduit

NOTE: CHECKOUTS (INCLUDING ASSOCIATE DIMENSION WILL BE PROVIDED ON KA-J INSTALLATION DOCUMENTS PROVIDED WI COUNTERS (INCLUDING POWER POLES AND BY ROSS STORES. TWO WEEKS PRIOR TO INSTALLATION INCLUDING 'PLUG-IN' CONNE

ALL SPYIS OUTLETS ARE TO BE ORANGE COVERS. LP OUTLETS ARE TO BE RED AN DEVICES ARE TO BE GRAY WITH STAINLES

NOTE: MOUNTING HEIGHT OF WALL PHONES HEIGHT ABOVE THE FLOOR, THE CENTER L 4 INCHES HIGHER. SEE 2/E7.

NOTE: VERIFY THROUGH ROSS CONSTRUC LOCATION OF ALL SALES AREA PHONES DEVICES PRIOR TO INSTALLATION.

GENERAL POWER NOTES:

A. POWER OUTLETS TO BE HARBELL, AS INDICATED, WITH GRAY DEVICES FOR DIRTY POWER; ALL LP OUTLETS ARE TO HAVE RED DEVICES AND NOR POWER OUTLETS (CLEAN POWER) ARE TO HAVE ORANGE DEVICES. ALL COVER PLATES ARE TO BE BRUSHED STAINLESS STEEL.

B. VIL = VERIFY EXACT LOCATION OF ALL OUTLETS AND DEVICES WITH ROSS FINAL FIXTURING PLAN AND ROSS C.M. PRIOR TO ROUGH-IN.

C. PROVIDE FOR EHS SYSTEM PURCHASE AND COMMISSIONING THROUGH EHS VENDOR.

D. IF LOCAL MUNICIPAL REGULATORS/CODES REQUIRE LOW VOLTAGE ELECTRICAL WIRING (TELEPHONE, SIGNAL, ANNUNCIATOR, HEATING, ETC) TO BE RUN IN SOLID CONDUIT, THEN THE SCOPE OF WORK IS TO INCLUDE THE INSTALLATION OF THAT CONDUIT. IF SO, THE CONTRACTOR MUST OBTAIN AND VERIFY THE REQUIRED LAYOUT OF THE ROSS TELECOMMUNICATIONS SYSTEM FROM THE ROSS CONSTRUCTION MANAGER.

E. CONTROL WIRE, CURRENT AND SURGE HOARDED WIRING ARE NOT PERMITTED IN ANY FINISHED SPACE.

F. SEE ENGINEERING PLANS FOR LOCATIONS OF TEMPERATURE SENSORS.

G. IT IS THE RESPONSIBILITY OF THE ELECTRICAL CONTRACTOR TO COORDINATE ELECTRICAL DEVICES AND TELEPHONE DEVICES (INCLUDING EQUIPMENT LOCATIONS AND REQUIREMENTS WITH THE G.C. AND THE ASSOCIATED UTILITY COMPANY PRIOR TO CONSTRUCTION.

H. CONNECT FEEDING OUTLETS, BOXES AND DEVICES IN THE CLEAN OFFICE AND EQUIPMENT CLOSET MUST BE ACCESSIBLE FROM ABOVE THE CEILING IN ADJACENT LOCKDEMERCIAL RM OR MANAGERS OFFICE. ALL STUBBED CONDUITS ARE TO HAVE PULL CORDS TIED IN PLACE FOR EASY USE.

I. NO SUBSTITUTIONS ARE PERMITTED FROM BASE BID MANUFACTURERS.

J. ALL OUTLETS FOLLOWING CORDITS FROM FRONT END CHECK-OUT DISTRIBUTION BOXES: +42" DATA TO EQUIPMENT ALL CONTRACTORS ARE TO LEAVE PULL WIRES IN CONDUITS AFTER INSTALLATION OF THEIR WORK.

GENERAL DEMOLITION NOTES:

A. THIS CONTRACTOR SHALL PERFORM ALL DEMOLITION OF EXISTING ELECTRICAL SYSTEMS AS INDICATED ON PLANS AND ARCHITECTURAL PLANS OR NECESSARY FOR THE PROJECT. REMOVE FROM SITE AND PROPERLY DISPOSE OF ALL MATERIAL AND DEBRIS FROM SITE HOME.

B. DEMOLITION DRAWINGS ARE GENERAL IN NATURE SHOWING THE SCOPE OF DEMOLITION WORK. CONTRACTOR IS TO VISIT THE SITE AND BECOME FAMILIAR WITH THE QUANTITY OF LIGHT FIXTURES, OUTLETS, ETC. REMOVE ALL EQUIPMENT AND DEVICES NO LONGER REQUIRED FOR THE NEW CONSTRUCTION. ALL EXISTING LIGHT FIXTURES AND DEVICES IN PROJECT AREAS SHALL BE REMOVED AND DISPOSED OF. REMOVE CONDUITS BEYOND NEW SURFACES. REMOVE ALL EXISTING WIRE FROM CONDUIT BACK TO POINT OF COMMON USE. REMOVE LABEL EXISTING CIRCUIT BREAKERS "SPARE" IF NOT REUSED FOR NEW WORK.

C. DISCONNECT EXISTING EQUIPMENT IN BUILDING THAT IS TO BE REMOVED UNDER OTHER SECTIONS. REMOVE ALL NONE CABLING SYSTEM AS DIRECTED BY OWNER. NO CABLES SHALL BE REMOVED OR CUT WITHOUT APPROVAL FROM OWNER. ANY EXISTING CABLES TO REMAIN SHALL BE APPROPRIATELY REMOVAL.

D. PATCH ALL SURFACES TO MATCH SURROUNDING FOR DEVICES TO BE REMOVED FROM EXISTING WALLS. ID. EXISTING ROUGH-IN BOXES IN WALL TO REMAIN MAY BE REUSED IF CODE COMPLYING AND APPROVED FOR LOCATION BY ARCHITECT.

E. THE ELECTRICAL CONTRACTOR IS RESPONSIBLE FOR THE INSTALLATION OF A DIRECT DEDICATED CONDUIT AND 25-PAIR CABLE (EITHER BY SELF OR THE SERVICE PROVIDER) FROM THE TELEPHONE SERVICE PROVIDERS SYSTEM TO THE ROSS TELEPHONE BOARD (ON A SERVICE GROUND AT THE BOARD, AND FOR DEDICATED (20VAC, 20AMP) GROUND (STILED RED POWER. THIS INSTALLATION MUST BE COMPLETE IN ORDER FOR TELEPHONE SERVICE TO BE INITIATED.

F. THE OWNER RESERVES THE RIGHT OF SALVAGE FOR ALL EXISTING ELECTRICAL EQUIPMENT PRIOR TO CEDING ALL EXISTING EQUIPMENT TO THE CONTRACTOR.

G. ALL CIRCUITS (HIGH ARE REQUIRED TO REMAIN ACTIVE SHALL BE MAINTAINED OR REWORKED AS REQUIRED TO BE MAINTAINED. ALL CIRCUITS SHALL BE VERIFIED WITH EXISTING DRAWINGS AND ACTUAL FIELD CONDITIONS. ALL EXISTING CIRCUITS OR CABLING SYSTEMS SERVING AREAS NOT AFFECTED BY DEMOLITION SHALL BE MAINTAINED DEMOLITION.

CONTRACTOR MUST VERIFY ALL CLEARANCES AND DIMENSIONS IN FIELD

1.0 EA	
1.0 EA	
2.0 EA	
1.0 EA	
4.0 EA	
4.0 EA	
1.0 EA	
12.0 EA	
1.0 EA	
1.0 EA	
5.0 EA	
1.0 EA	
2.0 EA	
2.0 EA	
1.0 EA	
2.0 EA	
763.1 FT	
481.4 FT	
37.3 FT	
1.0 EA	
2.0 EA	
16.0 EA	
2.0 EA	
5.0 EA	
4.0 EA	
5.0 EA	
1.0 EA	
1.0 EA	
4.0 EA	
3.0 EA	
2.0 EA	
1.0 EA	
3.0 EA	
4.0 EA	
2.0 EA	
1.0 EA	
20.3 FT	
28.5 FT	
248.7 FT	
3897.1 FT	
177.1 FT	
23.1 FT	
422.8 FT	
26.9 FT	
2.0 EA	
19.3 FT	
9.0 EA	
49.8 FT	

POWER FLOOR PLAN

1/8" = 1'-0"

1

N.J. CERTIFICATE OF AUTHORIZ. NO. 24GA27944500

DESIGNED BY: DB
APPROVED BY: CAT
DATE: 05-02-2024

CHRISTIAN A. CAT
NO. 24GE05358500
STATE OF NEW JERSEY

REVISIONS	
NO.	DATE

CAT
REVISIONS

POWER FLOOR PLAN

WATCHUNG SQUARE MALL
1515 US ROUTE 22
WATCHUNG, NEW JERSEY 07069
SOMERSET COUNTY NEW JERSEY

McHENRY & ASSOCIATES
25001 EMERY ROAD, SUITE #200
WARRENSVILLE HEIGHTS OHIO 44128

SCALE: AS NOTED
DATE: 05-02-2024

mcgarchitecture.com

Seal:

ROSS DRESS FOR LESS

STORE # 2662
" 2662 - WATCHUNG, NEW JERSEY "
Watchung Square Mall - 1515 US Route 22
Watchung, New Jersey 07069

REVISIONS
BID/PERMIT 05-03-2024

SCALE
AS NOTED

PROJECT NO. 23.291.10

SHEET NUMBER
E2

MCG ARCHITECTS 2023
ALL RIGHTS RESERVED

May 02, 2024 - 15:46:38 DWG Name: C:\Users\doorswell\OneDrive - McHenry & Associates\Desktop\Con Jobs 2023\23.291a_Ross - Watchung NJ\07 Comments\23.291a_E3 EDIT COMMENTS.dwg Updated By: doorswell

CODED NOTES:

1. DUCT SMOKE DETECTORS IN SUPPLY AND RETURN, FACTORY INSTALLED IN UNITS AND INSTALLED BY M.C. IN EXISTING/RELOCATED UNITS, COMPLETE WITH REMOTE TEST STATION. E.C. SHALL WIRE DUCT SMOKE DETECTORS TO FIRE ALARM CONTROL PANEL.
2. ROOFTOP UNIT WITH INTEGRAL GFCI RECEPTACLE AND NON-FUSED DISCONNECT SWITCH. E.C. SHALL PROVIDE ALL WIRING AS INDICATED.
3. EXHAUST FAN CONTROLLED BY LINE VOLTAGE THERMOSTAT AND EMS. REFER TO WIRING DIAGRAM DETAIL #5 ON SHEET E6.
4. NOT USED.
5. EXHAUST FAN PROVIDED BY M.C. WITH NON-FUSED DISCONNECT SWITCH.
6. CABINET HEATER PROVIDED BY M.C. WITH DISCONNECT SWITCH. COORDINATE EXACT LOCATION OF THERMOSTAT WITH M.C. AND OWNER, PRIOR TO WIRING.
7. TS-1A EMS SENSOR TO BE PROVIDED BY CCGBAC FOR EXISTING UH-1X. REFER TO EMS PLANS FOR EXACT LOCATION.
8. ELECTRIC UNIT HEATER BY M.C. WITH NON-FUSED DISCONNECT SWITCH. COORDINATE EXACT LOCATION OF THERMOSTAT WITH M.C. AND OWNER, PRIOR TO WIRING.
9. EXISTING ROOFTOP UNIT TO BE REUSED AND/OR RELOCATED BY M.C. - E.C. SHALL CONFIRM IN THE FIELD THAT GFCI RECEPTACLE AND NON-FUSED DISCONNECT SWITCH ARE IN GOOD WORKING CONDITION, OTHERWISE REPLACE. E.C. SHALL CONFIRM MOCP SIZE AND PROVIDE ALL WIRING AS INDICATED.

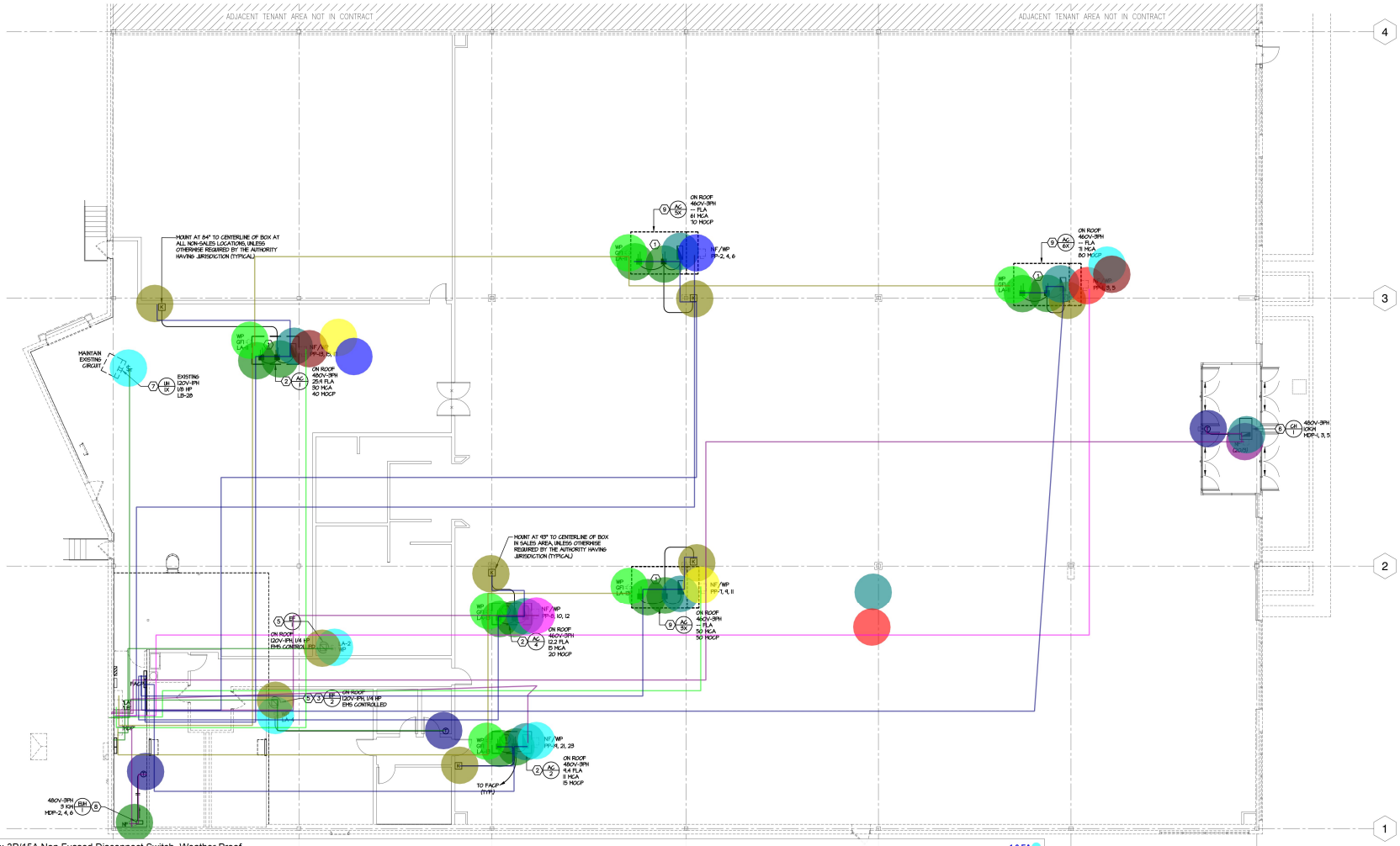

Disc: 3P/15A Non Fussed Disconnect Switch, Weather Proof	1.0 EA
Disc: 3P/20A Non Fussed Disconnect Switch, 480 V	1.0 EA
Disc: 3P/20A Non Fused Disconnect Switch, 480 V	1.0 EA
Disc: 3P/20A Non Fussed Disconnect Switch, Weather Proof	1.0 EA
Disc: 3P/40A Non Fussed Disconnect Switch, Weather Proof	1.0 EA
Disc: 3P/50A Non Fussed Disconnect Switch, Weather Proof	1.0 EA
Disc: 3P/70A Non Fussed Disconnect Switch, Weather Proof	1.0 EA
Disc: 3P/80A Non Fussed Disconnect Switch, Weather Proof	1.0 EA
FA: Duct Smoke Detector	12.0 EA
FA: Duct Smoke Detector Remote Test Switch And Alarm Light	6.0 EA
P: 1P/20A Equipment Connection	2.0 EA
P: 20A-125V GFCI Duplex Receptacle, Weather Proof, HUBBELL GFR5362SG & RW57500	6.0 EA
P: 20A-300V Manual Staring Switch With Thermal Overload Relay, Square D CLass 2520 (Or Approved)	3.0 EA
P: Prewired Unit Control Panel	7.0 EA
P: Thermostat Connection, Installed By MC And Wired By EC	3.0 EA
PWB: 3#10, 3/4" EMT Conduit	381.1 FT
PWH: 3#12, 3/4" EMT Conduit	192.5 FT
PWH: 4#3, 1#8, 1-1/4" EMT Conduit	251.6 FT
PWH: 4#3, 1#8, 1-1/4" LFMC Conduit = 3FT	1.0 EA
PWH: 4#3, 1#8, 1-1/4" RGS Conduit = 5FT	1.0 EA
PWH: 4#4, 1#8, 1-1/4" EMT Conduit	187.0 FT
PWH: 4#8, 1#10, 3/4" EMT Conduit	239.6 FT
PWH: 4#8, 1#10, 3/4" LFMC Conduit = 6 FT	1.0 EA
PWH: 4#8, 1#10, 3/4" RGS Conduit = 10 FT	1.0 EA
PWH: 5#10, 3/4" EMT Conduit	477.2 FT
PWH: 5#10, 3/4" LFMC Conduit = 12 FT	1.0 EA
PWH: 5#10, 3/4" RGS Conduit = 10 FT	1.0 EA
FW: 2#14, 3/4" EMT Conduit	933.4 FT

CONTRACTOR MUST VERIFY ALL CLEARANCES AND DIMENSIONS IN FIELD

DESIGNED BY:	DRAWN BY:	CHECKED BY:
DB	DB	CAT
APPROVED BY:		REVISIONS
CAT		NO. DATE

CHRISTIAN A. TODD
NO. 24GE05385800

N.J. CERTIFICATE OF AUTHORIZ. NO. 24GA27944500

MECHANICAL POWER FLOOR PLAN

WATCHUNG SQUARE MALL
1515 US ROUTE 22
WATCHUNG, NEW JERSEY 07069
SOMERSET COUNTY NEW JERSEY

McHENRY & ASSOCIATES
25001 EMERY ROAD, SUITE #200
WARRENSVILLE HEIGHTS OHIO 44128

SCALE: AS NOTED DATE: 05-02-2024

MECHANICAL POWER FLOOR PLAN SCALE 1/8" = 1'-0" 1

mcgarchitecture.com

Seal:

DRESS FOR LESS

STORE # 2662
" 2662 - WATCHUNG, NEW JERSEY "
Watchung Square Mall - 1515 US Route 22
Watchung, New Jersey 07069

REVISIONS
BID/PERMIT 05-03-2024

SCALE
AS NOTED

PROJECT NO. 23.291.10

SHEET NUMBER
E3

MCG ARCHITECTS 2023
ALL RIGHTS RESERVED

May 02, 2024 - 14:12:18 DWG Name: C:\Users\dborsell\OneDrive - McHenry & Associates\Desktop\Dan Jobs 2023\5936_Rose - Watchung NJ\5936_E3.dwg Updated By: dborsell

SYMBOLS

$	20A-120/277V SINGLE POLE TOGGLE SWITCH, HUBBELL, TYPE CS1221
$R	20A-300V MANUAL STARTING SWITCH W/ THERMAL OVERLOAD RELAY- IF NOT INTEGRAL TO MOTOR - FLUSH MOUNTED IN WALL AND SURFACE MOUNTED AT EQUIPMENT ROOMS (SQUARE D CLASS 2510 (OR APPROVED)
$OS	120/277V INFRARED WALL SWITCH OCCUPANCY SENSOR - WATTSTOPPER #PW-100
$OD	0-10 VOLT DIMMER SWITCH & OCCUPANCY/VACANCY SENSOR, LUTRON #MS-2101-XX
$D	0-10 VOLT DIMMER SWITCH- LUTRON #NTSTV-DV-XX WITH STAINLESS STEEL COVER PLATE.
DS	DIMMING MODULE POWER PACK- LUTRON #FP-DV
OS	OCCUPANCY SENSOR - LUTRON #LOS-CDT-500-WH
OH	OCCUPANCY SENSOR - LUTRON #LOS-CDT-2000-WH
PC	PHOTOCELL PROVIDED BY ASSIGNED EMS VENDOR. REFER TO EMS PLANS FOR ADDITIONAL INFORMATION.
	20A-125 V SINGLE RECEPTACLE, HUBBELL, TYPE 5361 (GRAY), 18" AFF UNLO.
	20A-125 V DUPLEX RECEPTACLE, HUBBELL, TYPE CR5362 (GRAY), 18" AFF UNLO.
	SAME AS ⊕ EXCEPT MOUNTED ABOVE COUNTER
GFI	SAME AS ⊕ EXCEPT WITH INTEGRAL "GFI" PROTECTION, HUBBELL TYPE GFR5362SG
	SAME AS ⊕ EXCEPT 2 MOUNTED IN 2 GANG BOX WITH SINGLE COVER PLATE.
WP	20A-125 V WEATHER RESISTANT DUPLEX WITH HEATHERPROOF SINGLE WHILE IN USE COVER AND INTEGRAL GFCI PROTECTION, HUBBELL #GFR5362SG AND #WP5300
SP/RG	SURGE PROTECTED RECEPTACLE. PASS & SEYMOUR 15A DUPLEX/MODEL 1655RG2GSP ORANGE.
	FLUSH FLOOR MOUNTED BRUSHED NICKEL DUPLEX RECEPTACLE WITH CONCEALED FEED AND FLUSH HINGED COVER, USE CONCEALED UNDER SLAB DISTRIBUTION, HUBBELL, TYPE B2436 FLOOR BOX WITH HUBBELL, TYPE SA-3825 COVER.
	DATA OUTLET, MOUNTING HEIGHT AS NOTED, (VERIFY LOCATIONS PRIOR TO INSTALLATION). PROVIDE PLASTER RING AND CONDUIT WITH PULL-STRING STUBBED TO ABOVE CEILING (TYPICAL 6MB INSTALLATION OR SIMILAR PER MOUNTING CONDITION). ROSS INSTALLER MILL PROVIDE AND INSTALL WIRE & JACK.
	TELEPHONE 42" AT MANAGERS, 42" A.F.F. AT SALES FLOOR, U.O.N. (NOTE: SALES FLOOR PHONES ARE NOT PUBLIC PHONES AND AS SUCH MAY NOT BE REQUIRED TO BE ACCESSIBLE. ARCHITECT OF RECORD MUST VERIFY). LOCATIONS SHOWN FOR CONCEPT AND MUST BE VERIFIED THROUGH THE ROSS CONSTRUCTION REPRESENTATIVE PRIOR TO INSTALLATION. PROVIDE PLASTER RING AND CONDUIT WITH PULL-STRING STUBBED TO ABOVE CEILING (TYPICAL 6MB INSTALLATION OR SIMILAR PER MOUNTING CONDITION). CEILING MOUNTED DEVICES ARE TO BE FED CONCEALED FROM WITHIN TUBE. CONFIRM LOCATIONS AND PROVIDE FEED HOLES WITH MILL WIRES. ROSS INSTALLER MILL PROVIDE AND INSTALL WIRE, JACK, AND PHONE.
	STANDARD JUNCTION BOX SIZED PER NEC, AND SUPPORTED INDEPENDENT OF CONDUIT SYSTEM
	HEVY-DUTY 3 POLE FUSIBLE DISCONNECT SWITCH NEMA#3R#6 SIZED AS NOTED OR AT 125% OF ACTUAL MOTOR NAMEPLATE RATING-SWITCH SIZE AS NOTED N.F. DENOTES NON-FUSIBLE-MOUNTED AT EQUIPMENT H.F. DENOTES HEATHERPROOF-MOUNTED AT EQUIPMENT 00/000 = DISCONNECT SIZE / FUSE SIZE - MOUNTED AT EQUIPMENT
	PREWIRED UNIT CONTROL PANEL-CONNECT AND WIRE PER MFGRS. WIRING DIAGRAMS. PROVIDE DISCONNECT SWITCH AS REQUIRED BY N.E.C.
	MOTOR CONNECTION AS NOTED-CONNECT WITH FLEXIBLE OR SEALTIGHT CONDUIT
	THERMOSTAT CONNECTION, THERMOSTAT FURNISHED & INSTALLED BY H.C., WIRED BY E.C.
	120/208V - 3 PHASE - 4 WIRE ELECTRICAL BRANCH CIRCUIT PANEL
	480/277V - 3 PHASE - 4 WIRE ELECTRICAL BRANCH CIRCUIT PANEL

	CONDUIT RUN EXPOSED, OVERHEAD, CONCEALED ABOVE CEILING OR IN WALL. CROSSHATCHES DENOTE NUMBER OF #12 AWG COPPER CONDUCTORS UNLESS NOTED OTHERWISE. IF NO CONDUCTORS ARE SHOWN PROVIDE 2 #12 + GND. MINIMUM OR AS REQUIRED
	CONDUIT RUN IN OR BELOW FLOOR SLABS - MAINTAIN 2" MINIMUM CONCRETE COVER ABOVE CONDUIT - CROSSHATCHES DENOTE NUMBER OF #12 AWG COPPER CONDUCTORS UNLESS NOTED OTHERWISE. IF NO CONDUCTORS ARE SHOWN PROVIDE 2 #12 + GND. MINIMUM OR AS REQUIRED
K	+42" SECURITY KEYPAD. PROVIDE J-BOX WITH 3/4" CONDUIT STUBBED TO ACCESSIBLE LOCATION ABOVE CEILING WITH PULL-STRING. KEYPAD AND WIRING BY ROSS INSTALLER.
M K	PUSH-BUTTON +42" A.F.F. U.N.O., USE STAINLESS STEEL FASTENERS AND PROVIDE WATERTIGHT INSTALLATION, CARLON #CH620. CONNECT TO MATCHING BELL OR BUZZER NUMBER.
ES M	PROVIDE VON DUPRIN - MODEL 6211 ELECTRIC STRIKE AND LOCKETICS (BY SCALAGE) 1ORD MOMENTARY WALL SWITCH. UNLOCKING OF LATCH TO BE AUDIBLE.
M	MOUNT BUZZER ABOVE CEILING AT OFFICE WALL. WALL MOUNTED (48"-0" A.F.F.) ALL OTHER LOCATIONS. CONNECT TO PUSH BUTTON OF MATCHING NUMBER. BUZZER SOUND LEVELS MUST BE ADJUSTABLE AND BE AUDIBLE WITHIN 75-FT OF LOCATION, 24V SYSTEM. EDWARDS #540A SERIES ADAPTABUZZER.
M K2	MOUNT BELL ABOVE CEILING AT OFFICE WALL OR CUSTOMER SERVICE. WALL MOUNTED (48"-0" A.F.F.) ALL OTHER LOCATIONS. CONNECT TO PUSH BUTTON OF MATCHING NUMBER. BELL SOUND LEVELS MUST BE ADJUSTABLE AND BE AUDIBLE WITHIN 75-FT OF LOCATION, 24V SYSTEM. EDWARDS #540 SERIES ADAPTABELL.
M	DOORBELL TRANSFORMER MOUNTED ABOVE CEILING OR ON WALL, EDWARDS TO MATCH BELL/BUZZER.
C	CONTACTOR - AMPACITY AND POLES AS NOTED WITH NEMA 1 ENCLOSURE

FIRE ALARM SYMBOLS

F	FIRE ALARM SYSTEM MANUAL PULL STATION - PROVIDE WITH VANDAL RESISTANT PLASTIC GUARDS (FLUSH MOUNTED, TOP OF OPERATING HANDLE AT 46" A.F.F.)
SIR	FIRE ALARM SYSTEM SIGNAL HORN WITH ADA STROBE, FLUSH MOUNTED 12" BELOW CEILING (ENTIRE STROBE MUST BE WITHIN 80" - 96" A.F.F.). CANDELA RATING AS SHOWN. 110vac UNLESS NOTED OTHERWISE.
	FIRE ALARM SYSTEM SIGNAL HORN WITH ADA STROBE, FLUSH MOUNTED IN CEILING. CANDELA RATING AS SHOWN. 110vac UNLESS NOTED OTHERWISE.
S10	[illegible]
FACP	[illegible]
ANN	[illegible]
	[illegible]
FS	[illegible]
TS	[illegible]
V cd	[illegible]
V cd	[illegible]
	[illegible]
M	[illegible]
CM	[illegible]
MM	[illegible]
KB	[illegible]

- *EMS: Dimming Control Panel
- *EMS: Energy Management Control Panel
- *FA: Fire Alarm Control Panel
- *FA: Fire Alarm Smoke Detector
- *G:#6 CU Grounding Wire in 3/4" PVC SCH 40 Conduit = 30 ft
- *LC: P: Lighting Control Panel
- *Misc: 3/4" Exposed Plywood
- Misc: 3/4" Exposed Plywood
- *Misc: 6"x6" Junction Box Wth (2)2" EMT Conduit With pull String
- *Misc: 12"x12" Junction Box With 2(3)" EMT Conduit with pull String
- Misc:Junction Box
- *P: 2" EMT Conduit With Pull String = 20 FT
- *P: 4"x4" Trim Ring With Stainless Steel Cover Plate And 3" Bushing
- *P: 20A-120V Single Pole Toggle Switch, HUBBELL TYPE 1221
- *P: 20-125V Duplex Receptacle, HUBBELL, Type CR5362(Gray)
- *P: 20-125V Quadplex Receptacle, HUBBELL, Type CR5362(Gray)
- *P: 20-125V SP/IG Quadplex Receptacle, HUBBELL, Type CR5362(Gray)
- *P: Door Bell Transformer
- *P: Door Bell, 24V, EDWARDS #340 SERIES Adaptable
- *P: Duplex Receptacle, 24HR, 120VAC, 10AMP, Burglar Alarm Panel. RED (BA) (LP)
- *P: Duplex, 24HR, 120V, 10AMP, Cell Backup RED(LP)
- *P: Energy Management System Override Panel
- *P: GFCI Duplex Receptacle, HUBBELL TYPE GFR5362SG
- *P: Line Thermostat
- PWB: 3#12, MC Cable
- PWH: 3#12, 3/4" EMT Conduit
- PWH: 5#12, 3/4" EMT Conduit
- PWH: 7#12, 3/4" EMT Conduit
- *Sec: Security Keypad
- *Tele : Data Outlet
- *Tele: 4'x8'x3/4" Plywood Phone Board
- *Tele: Telephone Outlet
- *FA: Buglar Fire Alarm Panel

LIGHTING FIXTURE SCHEDULE (AMERICAN WHOLESALE) NO EXCEPTIONS

TYPE	DESCRIPTION	MOUNTING	LAMPS/ LIGHT ENGINE	FIXTURE WATTS	VOLTS	MANUFACTURER	CATALOG NO.
A	2'x4' LED TROFFER WITH PRISMATIC LENS & 0-10V DIMMING DRIVER	RECESSED GRID	PROVIDED W/ UNIT - 4800 LUMENS	38	120/277	METALUX	2SQRL24-U-D
B	2'x4' LED TROFFER WITH PRISMATIC LENS, 0-10V DIMMING DRIVER & EMERGENCY BATTERY PACK (1400 LUMENS)	RECESSED GRID	PROVIDED W/ UNIT - 4800 LUMENS	38	120/277	METALUX	2SQRL24-U-D-EM4
C	8' LED STRIP FOR VALANCE WITH 0-10V DIMMING DRIVER	VALANCE	PROVIDED W/ UNIT - 6822 LUMENS	56	120/277	METALUX	SEN/L26-U-D
D	4' LED STRIP FOR VALANCE WITH 0-10V DIMMING DRIVER	VALANCE	PROVIDED W/ UNIT - 3411 LUMENS	28	120/277	METALUX	SEN/L13-U-D
DL	EXTERIOR WALL MOUNTED LED DOCK LIGHT (SHIELDED), LISTED FOR WET LOCATIONS	SURFACE WALL	PROVIDED W/ UNIT - 4199 LUMENS	32	120/277	LUMARK	WP-SSL-RD-32-ELD + VS/WPGL
E	EXTERIOR WALL MOUNTED LED FIXTURE (NON-SHIELDING), LISTED FOR WET LOCATIONS	SURFACE WALL	PROVIDED W/ UNIT - 4199 LUMENS	32	120/277	LUMARK	WP-SSL-RD-32-ELD
F	2'x4' LED TROFFER WITH PRISMATIC LENS, 0-10V DIMMING DRIVER, AND FLANGE FOR HARD CEILING	RECESSED DRYWALL	PROVIDED W/ UNIT - 4800 LUMENS	38	120/277	METALUX	2SFRL24-U-D
K	8' LED STRIP WITH 0-10V DIMMING DRIVER & EMERGENCY BATTERY PACK (1400 LUMENS)	RIGID PENDANT AS HIGH AS POSSIBLE	PROVIDED W/ UNIT - 6822 LUMENS	56	120/277	METALUX	SEN/L26-U-D-EM4
Q	8' APERTURE RECESSED LED DOWNLIGHT WITH MEDIUM DISTRIBUTION, SPECULAR CLEAR FINISH, WHITE TRIM RING, & LISTED FOR WET LOCATIONS	RECESSED	PROVIDED W/ UNIT - 4000 LUMENS	41.6	120/277	PORTFOLIO	LD68-4-010-LED6-40-B-35-L6-W-WP-LI
R	8' LED STRIP WITH 0-10V DIMMING DRIVER	RIGID PENDANT AS HIGH AS POSSIBLE	PROVIDED W/ UNIT - 6822 LUMENS	56	120/277	METALUX	SEN/L26-U-D
R1	4' LED STRIP WITH 0-10V DIMMING DRIVER	RIGID PENDANT AS HIGH AS POSSIBLE	PROVIDED W/ UNIT - 3411 LUMENS	28	120/277	METALUX	SEN/L13-U-D
S	2'x4' LED TROFFER WITH PRISMATIC LENS, 0-10V DIMMING DRIVER, FLANGE FOR	RECESSED	PROVIDED W/ UNIT -	38	120/277	METALUX	2SFRL24-U-D-EM4

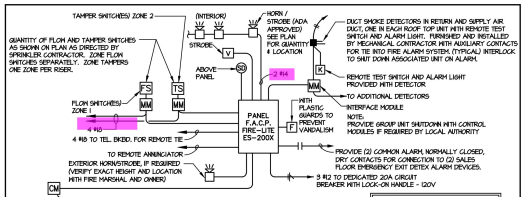

NOTES:

1. FURNISH AND INSTALL A COMPLETE, FULLY OPERATIONAL AND FULLY CODE COMPLIANT, ELECTRICALLY SUPERVISED, CLOSED CIRCUIT FIRE ALARM SYSTEM INCLUDING CONDUIT, HINGES, BOXES, CONTROL PANEL, SMOKE DETECTORS, DUCT SMOKE DETECTORS, FIRE ALARM ANNUNCIATOR WITH REMOTE KEYPAD, HEAT DETECTORS, MANUAL PULL STATIONS, AUDIO/VISUAL SIGNAL DEVICES, AND SPRINKLER WATER FLOW AND SUPERVISORY SWITCHES. THE SPRINKLER SYSTEMS SHALL BE PROVIDED UNDER WORK SPECIFIED IN THE PROJECT ENGINEERING SPECIFICATION, AND CONNECTED TO THE FIRE ALARM SYSTEM BY THE FIRE ALARM SUPPLIER.
2. ALL EQUIPMENT COMPRISING THE FIRE ALARM SYSTEM SHALL BE LISTED, LABELED OR APPROVED BY UNDERWRITERS LABORATORIES, INC. FOR USE AS FIRE ALARM EQUIPMENT.
12. AT AN APPROPRIATE TIME SCHEDULED PRIOR TO TURNOVER, THE FIRE ALARM SYSTEM SUPPLIER-INSTALLER IS TO CONTACT TYCO SECURITY SERVICES AT (800) 458-2241 EXTENSION 2808 TO MAKE THE FINAL CONNECTION AND COMMENCE FIRE ALARM SYSTEM MONITORING. TURNOVER IS NOT COMPLETE WITHOUT COMMENCEMENT OF SYSTEM MONITORING.
13. THE FIRE ALARM SYSTEM SUPPLIER-INSTALLER IS TO PRE-PROGRAM THE CONTROL PANEL AS A FULLY OPERATIONAL LOCAL SYSTEM AND MUST LEAVE IN A SLEEVED BINDER ATTACHED TO THE PANEL ALL PROGRAMMING KEYS, CODES MANUALS AND OTHER DEVICES NECESSARY FOR FUTURE RE-PROGRAMMING TOGETHER WITH SUPPLIER-INSTALLER'S CONTACT NAME AND PHONE NUMBER. NO EXCEPTIONS.
14. SUBMIT COMPLETED ELECTRICAL PLANS FOR REVIEW TO ADT SECURITY SYSTEMS, NATIONAL ACCOUNTS, ROSS STORES PROJECT TEAM AND TO ROSS CONSTRUCTION REPRESENTATIVE (SEE PROTOTYPE SHEET A0.0 AND THE INITIATION LETTER PREPARED BY ROSS ARCHITECTURE FOR CONTACT NAMES AND ADDRESSES).
15. AN INSPECTED, PASSED, COMPLETE AND FULLY OPERATIONAL MONITORED FIRE ALARM SYSTEM INCLUDING COMPLETE RELATED SYSTEMS, SUCH AS TELEPHONE (WHERE REQUIRED) AND POWER, IS REQUIRED FOR SATISFACTORY COMPLETION OF THE ROSS G.C.'S CONSTRUCTION OBLIGATION AND FOR CONSTRUCTION TURNOVER TO THE TENANT. THE SATISFACTORY COMPLETION OF THIS REQUIREMENT MAY NECESSITATE EARLY COORDINATION AND SCHEDULING OF THE ROSS TELECOMMUNICATIONS VENDOR, INITIATE CONTACT AND SCHEDULING THROUGH THE ASSIGNED ROSS CONSTRUCTION REPRESENTATIVE.
16. THE ENTIRE SYSTEM SHALL COMPLY WITH ALL APPLICABLE CODES AND LISTINGS, INCLUDING THE NFPA 72, UL, FM AND THE STATE AND LOCAL FIRE MARSHAL. CONTACT LOCAL FIRE DEPARTMENT FOR COORDINATION AND COMPLIANCE WITH LOCAL JURISDICTION.
17. ALL FIRE ALARM WIRING TO BE IN CONDUIT.
18. THE GENERAL CONTRACTOR SHALL COORDINATE THE FIRE ALARM SYSTEM INTERFACES BETWEEN THE FIRE ALARM CONTRACTOR, SPRINKLER CONTRACTOR, MECHANICAL CONTRACTOR AND ANY PERTINENT TRADES (FIRE ALARM, SPRINKLER SYSTEM HVAC AND FIRE SMOKE DETECTORS, ETC.).
19. PROVIDE T6-TFS LTE COMMERCIAL FIRE CELLULAR ALARM COMMUNICATOR (OR EQUALS NAPCO STARLINK FIRE TELEGARD TS7, OR HONEYWELL HMPZV-COM, MUST BE COMPATIBLE WITH FIRE-LITE ES-200X FA PANEL) UNLESS NOT PERMITTED BY THE AHJ. FIRE ALARM CONTRACTOR TO CONFIRM PRIOR TO SUBMITTING SHOP DRAWINGS.

NOTE: FIRE ALARM DEVICES SHOWN ON PLANS ARE FOR REFERENCE ONLY. THE CONTRACTOR SHALL SUBMIT SHOP DRAWINGS TO THE CITY FOR APPROVAL.

ROSS FIRE ALARM DIAGRAM (BY ROSS G.C.)

SCALE: NONE

1.0 EA	BE COMPATIBLE WITH ADT MONITORING INTERFACE AND
1.0 EA	DEMO MONITORED BY ADT SECURITY SYSTEMS, INC.
NAN EA	NATIONAL ACCOUNT WITH ADT. QUESTIONS ABOUT THE ADT
1.0 EA	INTERFACE AND COMPATIBILITY CAN BE ADDRESSED TO ADT
1.0 EA	CONTACT, SEE SHEET A0.0.
1.0 EA	FIRE CONTROL PANEL IS TO BE FIRE-LITE ES-200X (BASE BID)
NAN EA	PG-100 (ALTERNATE BID). NO EXCEPTIONS. DRAWINGS ARE
69.9 FT	ED FIRE-LITE SYSTEM. IF POTTER IS SUBSTITUTED, PROVIDE
	COMPONENTS AS REQUIRED FOR SYSTEM COMPATIBILITY.
1.0 EA	EACH DUCT SMOKE DETECTOR ONE REMOTE INDICATOR/TEST
1.0 EA	SET OF SAMPLING TUBES, AND ONE END-OF-LINE POWER
3.0 EA	RELAY.
1.0 EA	END-OF-LINE POWER SUPERVISION RELAY FOR EACH ZONE OF
1.0 EA	MONITORS.
1.0 EA	WIRING EXCEPT IN AREA WHERE OTHER CONDUIT AND PIPING
21.0 EA	
2.0 EA	IDENTIFY ALL CONDUCTORS APPROPRIATELY AND
8.0 EA	BY NUMBER AND COLOR FOR THE PURPOSE OF
2.0 EA	MAN AND SERVICING OF THE SYSTEM WITHIN THE CONTROL
2.0 EA	T EACH POINT OF TERMINATION OUTSIDE OF THE CONTROL
1.0 EA	RM CONTROL PANEL IS TO BE MOUNTED WHERE SHOWN IN THE
1.0 EA	NAL PLANS. A DEDICATED 120VAC, 10 AMP CIRCUITED
1.0 EA	DEVICE COLOR, IS TO BE PROVIDED AT THE LOCATION OF
1.0 EA	NRM CONTROL PANEL AND SO PERMANENTLY IDENTIFIED ON
3.0 EA	COVER PLATE. IF CELLULAR COMMUNICATOR IS NOT
1.0 EA	SCHEDULE AND COORDINATE SYSTEM CONNECTION TO TWO
	TELEPHONE LINES (LINE 6 PRIMARY; LINE 3 SECONDARY)
20.0 FT	ASSIGNED ROSS CONSTRUCTION REPRESENTATIVE.
1027.2 FT	DEVPAD/ANNUNCIATOR IS TO BE MOUNTED ON THE FIRE ALARM
71.2 FT	EL UNLESS REQUIRED TO BE MOUNTED ELSEWHERE BY LOCAL
67.2 FT	THORITY HAVING JURISDICTION.
1.0 EA	
6.0 EA	
6.0 EA	
1.0 EA	
1.0 EA	

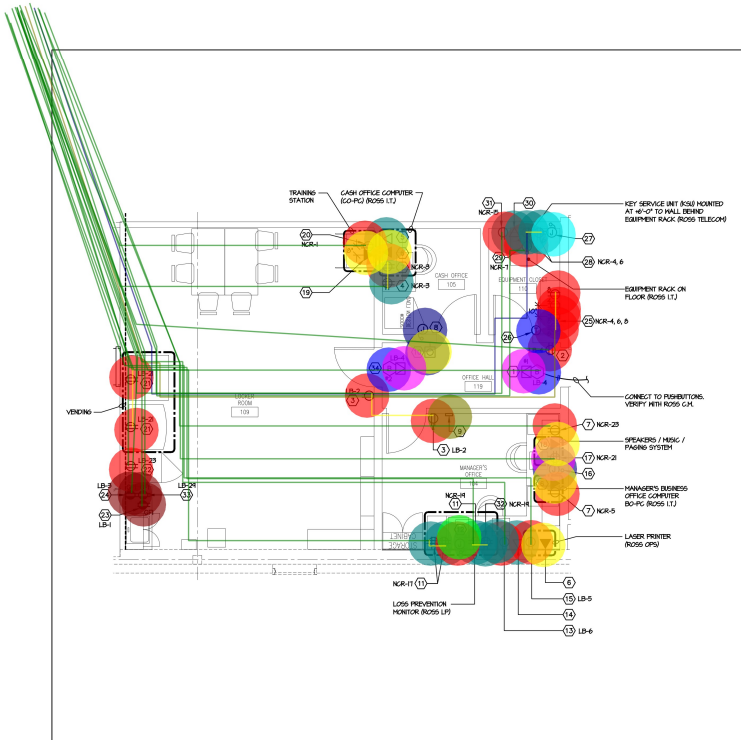

NOTES:

1. DEVICE COLORS IDENTIFICATION. ORANGE FOR SP/IG (CLEAN), GRAY FOR DIRTY; RED FOR LOSS PREVENTION.
2. ALL DEVICES OR ANY JUNCTION BOXES ARE TO HAVE STAINLESS STEEL COVERS.
3. STUB EMPTY CONDUITS TO REACHABLE LOCATION ABOVE CEILING WITH PULL STRING IN CONDUIT. PROVIDE NYLON BUSHINGS ON LARGER DIAMETER CONDUITS.
4. CASH OFFICE AND EQUIPMENT CLOSET HAVE HARD CEILINGS; STUB CONDUITS TO REACHABLE LOCATION ABOVE CEILING OF ADJACENT SPACE.
5. COORDINATE ROOSH-IN WITH WALL TYPE. SEE A41 AND A51.

CODED NOTES:

1. +120" (AT REACHABLE LOCATION ABOVE CEILING) SIGNAL 340A SERIES ADAPTABUZZER
2. +18" DUPLEX, GRAY, CONVENIENCE
3. +18" DUPLEX, GRAY, CONVENIENCE (ON WALL BELOW SWITCHES).
4. +42" SP/IG (GUAD, ORANGE (ROSS OPERATIONS)
5. +42" PHONE BOX W/ 3/4" CONDUIT W/ PULL STRING STUBBED TO ACCESSIBLE LOCATION ABOVE MANAGER'S OFFICE CEILING (ROSS TELECOM)
6. +42" DATA BOX W/ 3/4" CONDUIT W/ PULL STRING STUBBED TO ACCESSIBLE LOCATION ABOVE MANAGER'S OFFICE CEILING
7. +42" SP/IG DUPLEX, ORANGE
8. +16" J-BOX W/ 3/4" CONDUIT W/ PULL STRING STUBBED TO ACCESSIBLE LOCATION ABOVE MANAGER'S OFFICE CEILING, WALL SPEAKER (ROSS I.T.)
9. +42" ENERGY MANAGEMENT SYSTEM OVERRIDE PANEL - SEE DETAIL 4/E6
10. +42" JUNCTION BOX FOR L.P. KEYPAD
11. +18" SP/IG (GUAD, RED, DEDICATED 24 HOUR LP CIRCUIT
12. +15" (2"X12") J-BOX W/ TWO (2) 3" CONDUITS W/ PULL STRING STUBBED TO ACCESSIBLE LOCATION ABOVE CEILING, DVR. PROVIDE 4"X4" TRIM RING WITH STAINLESS STEEL COVER PLATE & 3" BUSHING.
13. +42" DUPLEX, GRAY (ROSS OPERATIONS), CONVENIENCE
14. SHARED TELEPHONE +42" PHONE BOX W/ 3/4" CONDUIT W/ PULL STRING STUBBED TO ACCESSIBLE LOCATION ABOVE CEILING (ROSS TELECOM), CONVENIENCE
15. +42" DUPLEX, GRAY
16. +54" J-BOX 1-GANG- W/ 3/4" CONDUIT W/ PULL STRING STUBBED TO ACCESSIBLE LOCATION ABOVE CEILING, MUSIC/PAGING (ROSS I.T.)
17. +64" (ABOVE SHELF) GUAD, GRAY, (ROSS I.T.)
18. +64" (ABOVE SHELF) DATA BOX W/ 1" CONDUIT W/ PULL STRING STUBBED TO ACCESSIBLE LOCATION ABOVE CEILING, (ROSS I.T.)
19. +18" DATA W/ 3/4" CONDUIT W/ PULL STRING STUBBED TO ACCESSIBLE LOCATION ABOVE SALES FLOOR CEILING, (ROSS I.T.)
20. +18" SP/IG DUPLEX, ORANGE, ON 24 HR. CIRCUIT (COMPUTER & ROSS I.T.)
21. +18" DUPLEX (300 W), GRAY, VENDING, DCI, (ROSS OPERATIONS), GFCI CIRCUIT BREAKER
22. +18" DUPLEX (6.5A) GRAY, REFRIGERATOR (ROSS OPERATIONS), GFCI CIRCUIT BREAKER
23. +42" DUPLEX, GFCI, GRAY (ROSS OPERATIONS)
24. +24" DUPLEX (UNDER COUNTERTOP-REFER TO DETAIL 2/A4.0), (650 W) GFCI, GRAY, MICROWAVE (ROSS OPERATIONS)
25. +54" DUPLEX (4) TOTAL AT 10" O.C. TYP. THIS WALL, GRAY, 24 HOUR CIRCUIT FOR MARK-DOWN EQUIPMENT (ROSS OPERATIONS / I.T.)
26. LINE THERMOSTAT - SEE DETAIL 5/E6
27. +42" 6"x6" J-BOX (BELOW SHELF) W/ TWO 2" CONDUITS W/ PULL STRINGS & NYLON BUSHINGS- ONE STUBBED TO AN ACCESSIBLE LOCATION ABOVE SALES FLOOR CEILING AND THE OTHER STUBBED TO AN ACCESSIBLE LOCATION ABOVE THE MANAGER'S OFFICE CEILING (ROSS I.T. / TELECOM). PROVIDE 4"X4" TRIM RING WITH STAINLESS STEEL COVER PLATE & 2" BUSHING.
28. +42" SP/IG (BELOW SHELF) 24 HOUR GUAD, ORANGE, RACK (ROSS I.T.)
29. +54" DUPLEX (ABOVE SHELF),120 VAC, 10 AMP, 24 HR SP/IG, ORANGE (KSU) (ROSS TELECOM)
30. +54" PHONE BOX (ABOVE SHELF) W/ 1" CONDUIT W/ PULL STRING STUBBED TO ACCESSIBLE LOCATION ABOVE SALES FLOOR CEILING (ROSS TELECOM). SPACE APART TO ALLOW FOR WALL MOUNT PHONE.
31. +54" SP/IG (ABOVE SHELF), 24 HOUR DUPLEX, ORANGE, ROUTER & MODEM (ROSS TELECOM)
32. +42" SP/IG (GUAD, RED, DEDICATED 24 HOUR LP CIRCUIT
33. +64" DUPLEX (WITHIN HALL CABINET-REFER TO DETAIL 2/A4.0), (650 W) GFCI, GRAY, MICROWAVE (ROSS OPERATIONS)
34. +120" (AT REACHABLE LOCATION ABOVE CEILING) SIGNAL 340 SERIES ADAPTABEL

2 E4 ENLARGED OFFICE PART PLAN 1/4" = 1'-0"

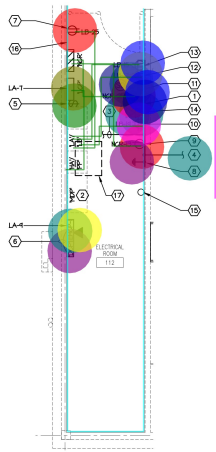

CODED NOTES:

1. 4' X 8' X 3/4" PLYWOOD PHONE BOARD, PROVIDED BY E.C. VERIFY ALL REQUIREMENTS WITH TELEPHONE CO. AND ROSS G.M.
2. SEE PLAN E2 AND ONE-LINE DIAGRAM ON PLAN E5 FOR INFORMATION ON ELECTRICAL SERVICE REQUIREMENTS.
3. SEE PLAN E2 FOR INFORMATION ON TELEPHONE SERVICE REQUIREMENTS.
4. 2" DIAMETER OPEN CONDUIT W/ PULL STRING & NYLON BUSHINGS, STUBBED FROM BACKBOARD TO HIGH IN JOIST SPACE. COORDINATE LOCATION WITH CONSTRUCTION MANAGER.
5. 20A-120V SINGLE POLE TOGGLE SWITCH, HUBBELL, TYPE 1221 FOR HAND DRYER DISCONNECTION MEANS, LABEL & MOUNT AT 12" A.F.F. TOGGLE SWITCH TO BE PROVIDED WITH INTEGRAL TOGGLE GUARD WITH LOCKOUT CAPABILITY PER SECTION 422.31 OF THE NEC.
6. REFER TO EMS PLANS FOR WIRING FROM EMCP TO DCP.
7. +18" DUPLEX, CONVENIENCE, GRAY
8. PROVIDE #6 AWG COPPER GROUND WIRE IN 3/4" CONDUIT TO MAIN BUILDING SERVICE GROUND
9. +18" DUPLEX, 24HR, 120 VAC, 10 AMP, INTELLIX, RED (LP)
10. +18" (GUAD, 120V, 20 AMP, TELEPHONE BOARD, GRAY (DHARK)
11. +18" DUPLEX, 24HR, 120 VAC, 10 AMP, FIRE ALARM CONTROL PANEL, RED (FCP)
12. +18" DUPLEX, 24HR, 120 VAC, 10 AMP, BURGLAR ALARM PANEL, RED (BA)(LP)
13. +18" DUPLEX, 24HR, 120V, 10 AMP, CELL BACKUP, RED (LP)
14. +54" EMERGENCY TELEPHONE
15. ROOF CAN MOUNTING LOCATION. VERIFY EXACT LOCATION WITH ROSS. SEE DETAIL 1/E6b.
16. 3/4" EXPOSED PLYWOOD 8'-0" HEIGHT ON ALL WALLS THIS ROOM
17. EXISTING 75 KVA FLOOR MOUNTED TRANSFORMER ON MEZZANINE

1 E4 ELECTRICAL ROOM PART POWER PLAN 1/4" = 1'-0"

CONTRACTOR MUST VERIFY ALL CLEARANCES AND DIMENSIONS IN FIELD

DESIGNED BY: DB	DRAWN BY: DB	CHECKED BY: CAT	
APPROVED BY: CAT		REVISIONS: NO. / DATE	

CHRISTIAN A. TODD
NO. 24GE05385800

N.J. CERTIFICATE OF AUTHORIZ. NO. 24GA27944500

WATCHUNG SQUARE MALL
1515 US ROUTE 22
WATCHUNG, NEW JERSEY 07069
SOMERSET COUNTY NEW JERSEY

McHENRY & ASSOCIATES
25001 EMERY ROAD, SUITE #200
WARRENSVILLE HEIGHTS OHIO 44128

SCALE: DATE: 05-02-2024

mcgarchitecture.com

Seal:

ROSS DRESS FOR LESS

STORE # 2662
" 2662 - WATCHUNG, NEW JERSEY "
Watchung Square Mall - 1515 US Route 22
Watchung, New Jersey 07069

REVISIONS

BID/PERMIT	05-03-2024

SCALE AS NOTED

PROJECT NO. 23.291.10

SHEET NUMBER
E4

MCG ARCHITECTS 2023 ALL RIGHTS RESERVED

May 02, 2024 - 09:44:20 DWG Name: C:\Users\dbarnwell\OneDrive - McHenry & Associates\Desktop\Can Jobs 2023\23291_Ross - Watchung, NJ\23291_E4.dwg Updated By: dbarnwell